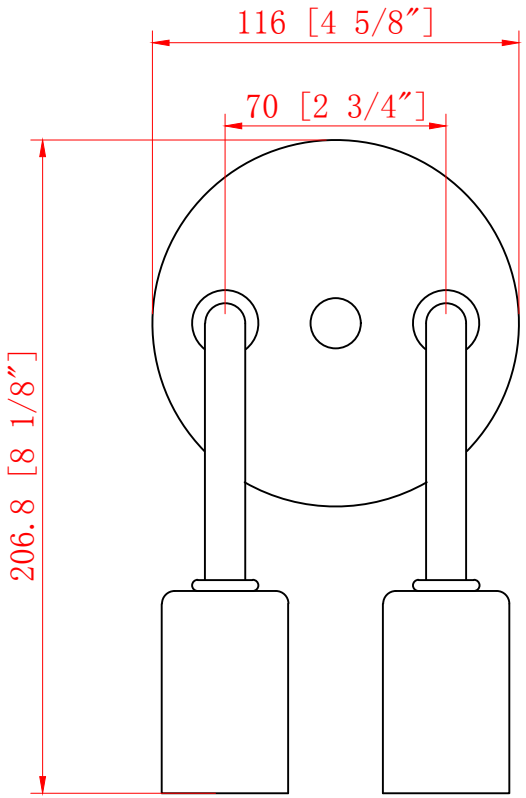

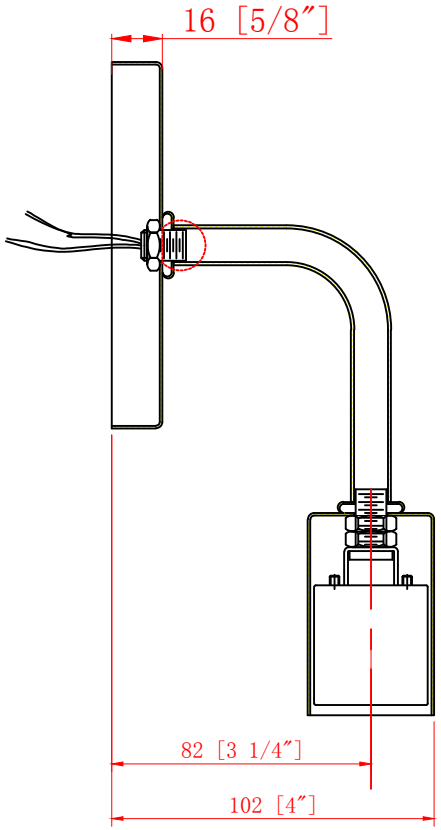

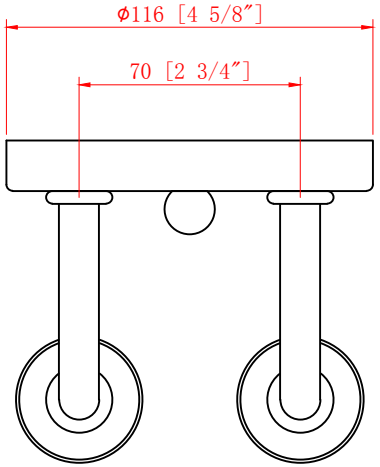

UL SPECIFICATION

* FIXTURE SHALL BE LISTED FOR LOCATION ONLY AND LABELED AS SUCH.
* FIXTURE MUST BE MANUFACTURED IN ACCORDANCE WITH UL STANDARD 1598.

PARTS SPECIFICATIONS

ITEM	QTY	DESCRIPTION
A	(1)	SOCKET- UL LISTED/CSA CERTIFIED BASE=MEDIUM SOCKET=PORCELIN SEE LEAD WIRE FOR SOCKET WIRE SPEC.
B	(1)	LEAD WIRE- 7" [180] FROM CANOPY UL LISTED/CSA CERTIFIED, AWG #18 105°C BLACK AND WHITE WIRE. STRIP 1/2 [12.7], SPLIT 3 [76.2]. FROM TOP OF SCROLL. (SEE CHART FOR COLOR).
C	(1)	GROUND WIRE- 7" [180] FROM CANOPY 1/4 LAY COPPER GROUND WIRE. FROM TOP OF SCROLL. (SEE CHART FOR TINT).

NO.	PART NO.	DESCRIPTION	REQ.

NOTICE: ANY DESIGN OR OTHER INFORMATION HEREON DEVELOPED BY THIS COMPANY IS CONFIDENTIAL MATERIAL AND EXCLUSIVE PROPERTY OF THE L.D. ALIYA CO. DISCLOSURE OR REPRODUCTION REQUIRES THE WRITTEN CONSENT OF THE L.D. ALIYA CO.

INNOVATIONS
CREATIVITY MEETS EVOLUTIONARY DESIGNS

DRAWN IN THIRD ANGLE PROJECTION

"mm" DIMENSION INDICATED IN [ ]
DIMENSION IN [ ] IS FOR REF. ONLY

TOLERANCES (EXCEPT AS NOTED)

DECIMAL	ANGULAR	FRACTIONAL	SCALE
NONE ± .031 .X ± .015 .XX ± .010 .XXX ± .005	± 1/2°	± 1/32	FULL

DATE	DRAWN BY	CHECKED BY	APPROVED BY
25/06/019	SSL	X	X

TITLE
2LT WALL MOUNT

PART NO. WALL REV.

ITEM NO. 622-2W REV. B